REVISIONS						
ZONE	LTR	DESCRIPTION	CHANGE No	DATE	BY	APPR'D
	AA	INITIAL RELEASE	DR50107	21AUG15	RMB	BLM
	AB	REMOVE EXTRA GRND WIRE FRM VIEWS	DR55833	11JAN16	RMB	BLM

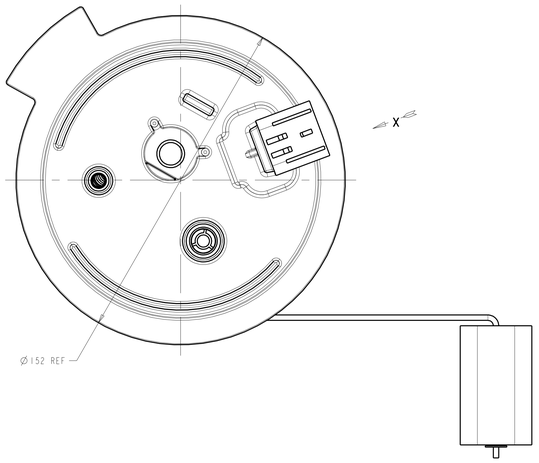

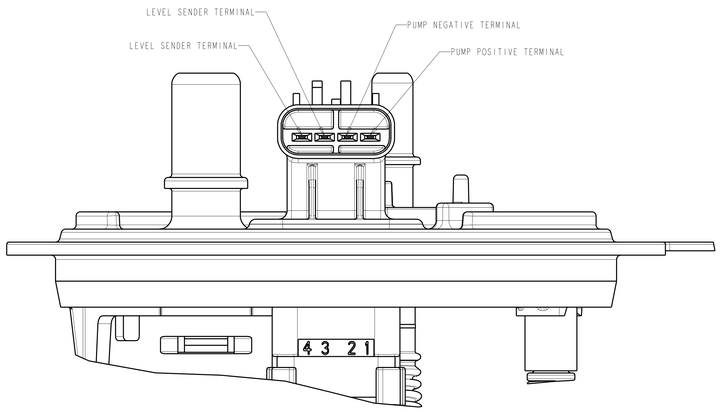

VIEW IN DIRECTION
OF ARROW "X"
E-CONNECTOR PINOUT
SCALE 2:1

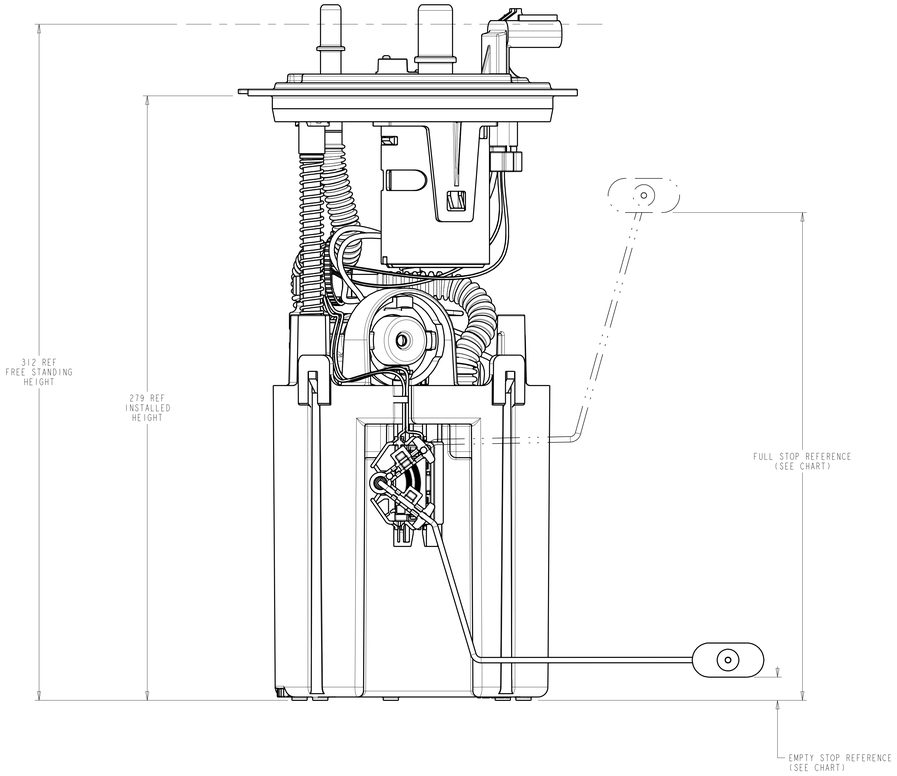

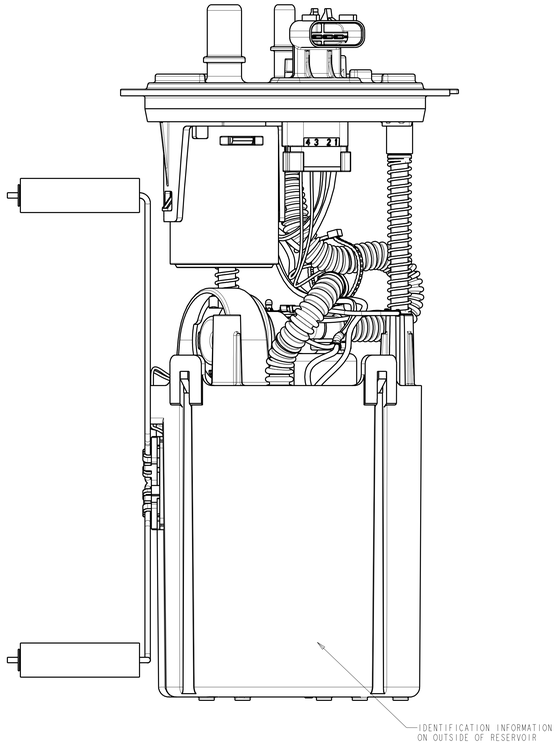

LEVEL SENDER UNIT HEIGHT VS RESISTANCE		
FLOAT POSITION	HEIGHT (mm)	RESISTANCE (Ohms)
FULL STOP	225.3 REF	10 ± 2
EMPTY STOP	10.5 REF	180 ± 4

NOTES:

1. CHANGE IN DESIGN, COMPOSITION, LOCATION OR PROCESSING FROM THE PART PREVIOUSLY APPROVED FOR PRODUCTION REQUIRES PRIOR APPROVAL BY TI AUTOMOTIVE.
2. SPECIAL CUSTOMER PACKAGING REQUIREMENTS MAY CALL FOR THE ADDITION OF SPECIFIC LABELS NOT SHOWN ON THIS DRAWING.
3. SHOWN WIRE ROUTING MAY DIFFER FROM FINISHED PRODUCT.
4. MODULE TO BE PACKAGED USING COMPONENTS NOTED ON BOM SO THAT CONTAMINATION FROM FOREIGN MATERIAL IS PREVENTED:
   - PLUG PROTECTORS ON PORTS
   - POLYBAG

▽ - DENOTES SAFETY CHARACTERISTIC
◇ - DENOTES SIGNIFICANT CHARACTERISTIC
⟐ - DENOTES HIGH IMPACT CHARACTERISTIC

TI AUTOMOTIVE CONFIDENTIAL AND PROPRIETARY
THIS DRAWING IS PROPRIETARY TO TI AUTOMOTIVE. TI AUTOMOTIVE CLAIMS PROPRIETARY RIGHTS IN THE SUBJECT MATTER SHOWN AND DESCRIBED ON THIS DRAWING AND RETAINS ALL INTELLECTUAL PROPERTY RIGHTS. THE DRAWING IS PROVIDED FOR REFERENCE PURPOSES ONLY AND ON THE RECIPIENT'S PROMISE TO RETURN IT UPON REQUEST. THE DRAWING SHALL NOT BE DISCLOSED TO OTHERS OR USED FOR THE PURPOSE OF MANUFACTURE BY OR PROCUREMENT FROM OTHERS OF THE ARTICLE OR PART SHOWN ON THE DRAWING WITHOUT THE PRIOR WRITTEN CONSENT OF TI AUTOMOTIVE OR OTHER RIGHT IS GIVEN OR IMPLIED BY THE PROVISION OF THIS DRAWING TO RECIPIENT. COPYRIGHT, TI AUTOMOTIVE 2010, ALL RIGHTS RESERVED.

METRIC
ALL DIMENSIONS ARE IN MILLIMETERS

DO NOT SCALE
DECIMAL TOLERANCES UNLESS OTHERWISE SPECIFIED
ONE PLACE ±0.25 TWO PLACE ±0.13 ANGLES ±1°

THIRD ANGLE PROJECTION

DIMENSIONS IN ACCORDANCE WITH ASME Y14.5 - 2009

TI Automotive
630 COLUMBIA ST.
CARO, MI 48723
+1 989.673.7727

ENGINEER	B.MIDDLETON	19JAN15	MATERIAL/SPECIFICATION: N/A
DES.MANAGER			
DESIGNER	R.BRUBAKER	19JAN15	
CAD SYSTEM: PROVE	SCALE: 1:1		SHEET NO. 1 OF 1

REFERENCE (D/REV.):	PLM REFERENCE/REV.: 2D: AR0039187/AB
REFERENCE (D/REV.): 000113293/AA	PLM REFERENCE/REV.: 3D: AR0039185/AB

DRAWING NAME: FUEL MOD(AFTMKT E150-450 11-14 MIDSHIP TNK)

SIZE: A0 DRAWING NUMBER: TU2002